REV	DESCRIPTION	SIGNATURE	DATE
A1			2021.09.16

TABLE A

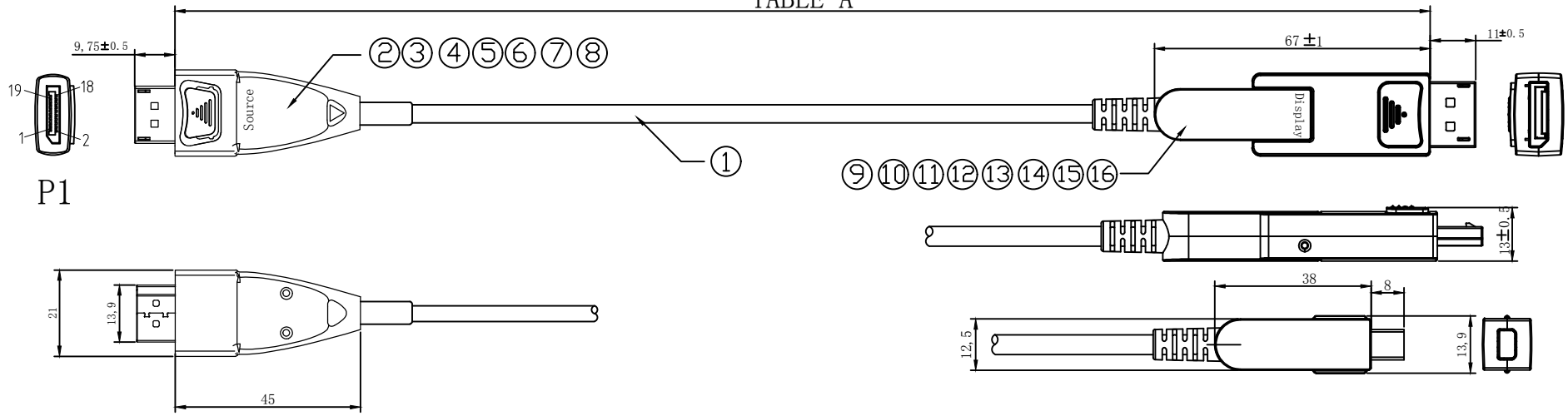

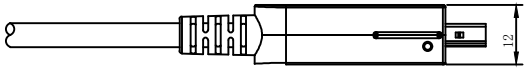

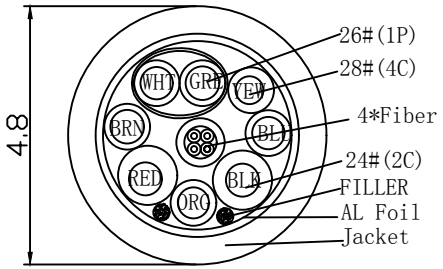

NOTES:
8K @60Hz
Support 100M

TABLE A

P/N		
AK4150		
AK4151		
AK4152		
AK4153		
AK4154		

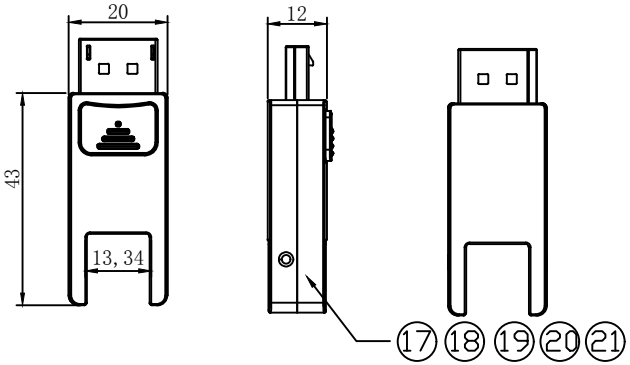

ITEM	SPECIFICATIONS					Q'TY	UNIT
10	DP D PCBA (Display)	1	PCS	21	DP A Shell(Bottom)black	1	PCS
9	DP D Male Plug Glod Plated	1	PCS	20	DP A Shell(Upper)black	1	PCS
8	Screw	2	PCS	19	DP A TO DP D Female PCBA	1	PCS
7	Spring Lock	1	PCS	18	DP D Female Plug Glod Plated	1	PCS
6	DP A Shell(Bottom)black(Source)	1	PCS	17	DP A Male Plug Glod Plated	1	PCS
5	DP A Shell(Upper)black	1	PCS	16	Screw	2	PCS
4	Tail Sheath Black	1	PCS	15	Spring Lock	1	PCS
3	DP A PCBA (Source)	1	PCS	14	DP D Shell(Bottom)black(Display)	1	PCS
2	DP A Male Plug Glod Plated	1	PCS	13	DP D Shell(Upper)black	1	PCS
1	DP AOC (4 Fiber+8 Copper) Black PVC OD:4.8MM	TABLE A	mm	12	Tail Sheath Black	1	PCS

ACT

CUSTOMER P/N:		
TYPE:DP 1.4 Active Optical Cable		
DRAW:	PAPT NO:	
CKD:	CUSTOMER:	UNIT:mm
APP:	DWG NO:	REV:1
SHELL:1/1		DATE:2021.09.16