REV.	ECN NO. / DESCRIPTION	DATE

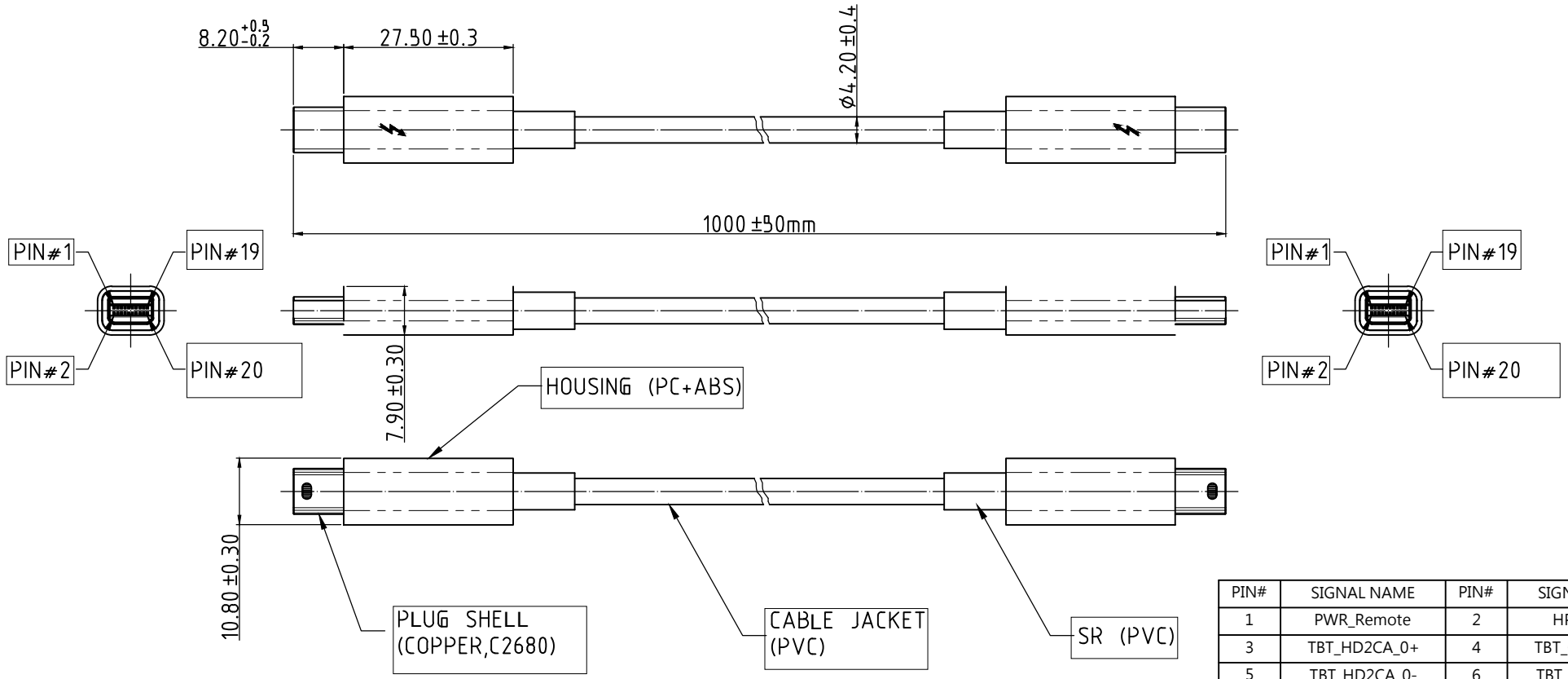

ITEM	COLOR
SB0009	WHITE
SB0010	BLACK

<note>
1) Cable Version: 2.0

PIN#	SIGNAL NAME	PIN#	SIGNAL NAME
1	PWR_Remote	2	HPD_GND
3	TBT_HD2CA_0+	4	TBT_CA2HD_0+
5	TBT_HD2CA_0-	6	TBT_CA2HD_0-
7	GND	8	GND
9	LSX_HD2CA	10	TERMINATED
11	LSX_CA2HD	12	TERMINATED
13	GND	14	GND
15	TBT_HD2CA_1+	16	TBT_CA2HD_1+
17	TBT_HD2CA_1-	18	TBT_CA2HD_1-
19	RETURN	20	Power_Local

GENERAL TOLERANCES UNLESS SPECIFIED		DRAWN BY	CHECKED BY	APPROVED BY	Q'TY	FINISH	MATERIAL	TITLE
.X ±	X.°±	DEMI	DEMI	CHARLES	/	/	/	GEN2 THUNDERBOLT CABLE
.XX ±	.X°±							
.XXX ±	.XX°±	6/09'15	6/09'15	6/09'15	SIZE	UNITS	PART NO.	DWG NO.
.XXXX ±	.XXX°±				A4	MM		

SHEET	SCALE	REV
/		