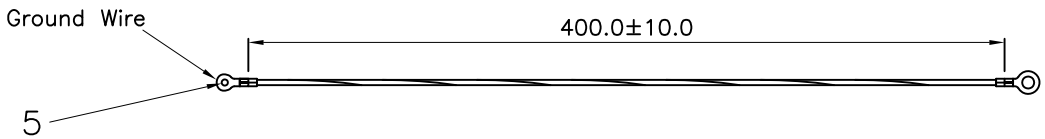

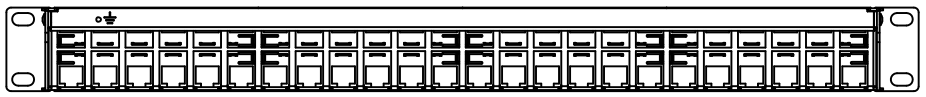

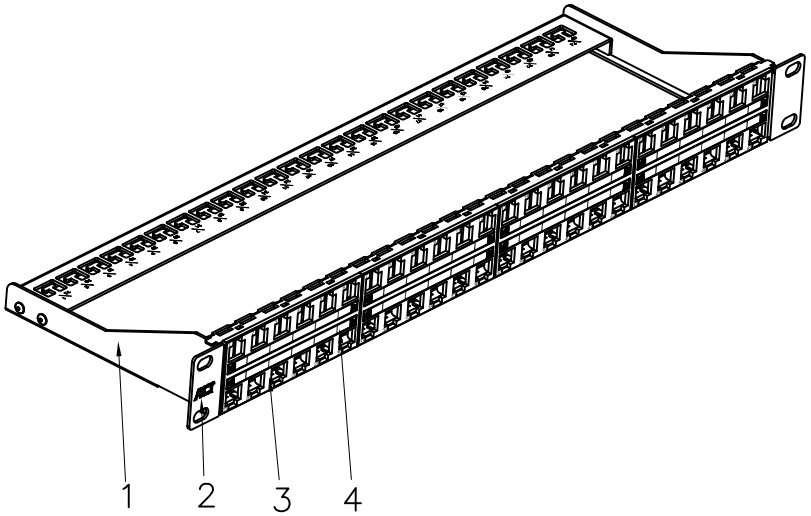

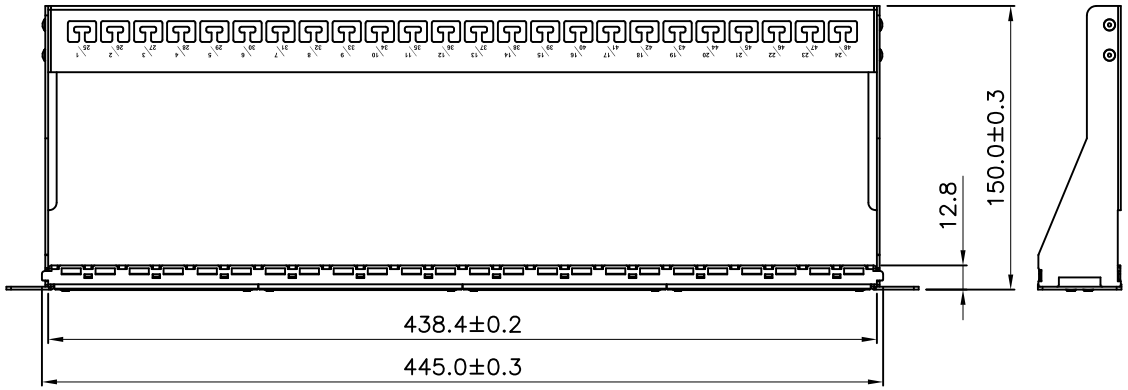

SCALE 1/4

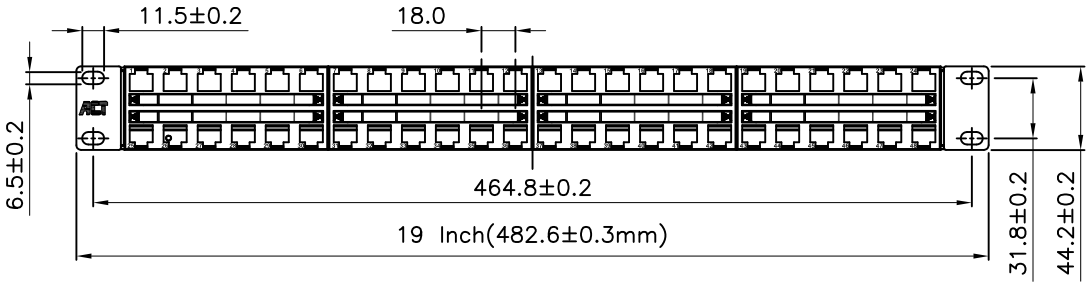

Specification :

Material :

1. Support Bar : SPCC, 1.5mm thickness with 5~8um Nickel plated.
2. Rear Panel : SPCC, 1.5mm thickness with 5~8um Nickel plated and Black color(RAL 9005) painted.
3. Frame : ABS-HB
4. Identification :
   4-1. Paper.
   4-2. Frame : PC, UL 94V-2.
5. Ground Wire : 18 AWG Wire, with Green/Yellow striped color, length 40 cm.

GENERAL TOLERANCE OF DIMENSIONS X.XXX ±0.1 X.XX ±0.2 X.X ±0.3	DRAWING	11.APR.2023	CKL	ACT
	CHECK	11.APR.2023	DAY	
	APPROVAL	11.APR.2023	FRANK	
		DATE	NAME	ITEM NO.: PP1031
	SCALE 1/4(A4)	UNIT	mm	DES.: 1U 48P PKJF C6A Patch Panel
HSF Spec.	DRAWING NO.	PP1031 1U 48P PKJF-C6A (SA1)		
RoHS	DRAWING CLASSIFICATION	S	SHEET 1 OF 1	A1